Thule XT Kit 3150

› Instructions

VW California, 4-dr Bus, **(T5)** 03-15, **(T6)** 15–
VW Caravelle, 4-dr Bus, **(T5)** 03-15, **(T6)** 15–
VW Multivan, 4-dr Bus, **(T5)** 03-15, **(T6)** 15–
VW Shuttle, 4-dr Bus, **(T5)** 03-15, **(T6)** 15–
VW Transporter, 4-dr Van, **(T5)** 03-15, **(T6)** 15–

This kit is only for vehicles with fixpoint mounting.

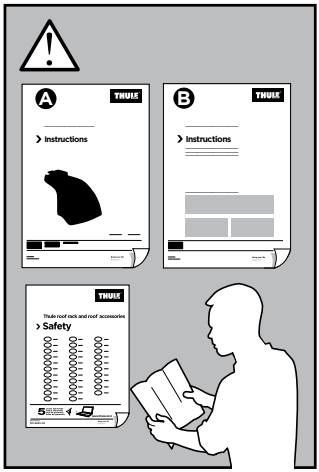

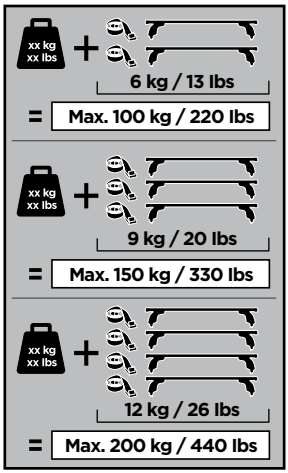

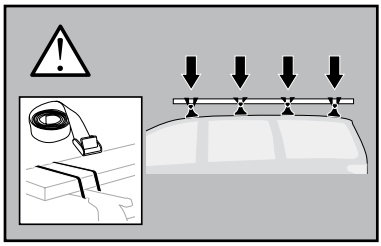

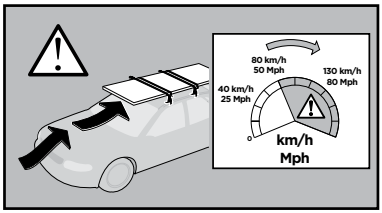

ISO 11154-E

183150
C.20150914
509-3150-01

Bring your life
thule.com

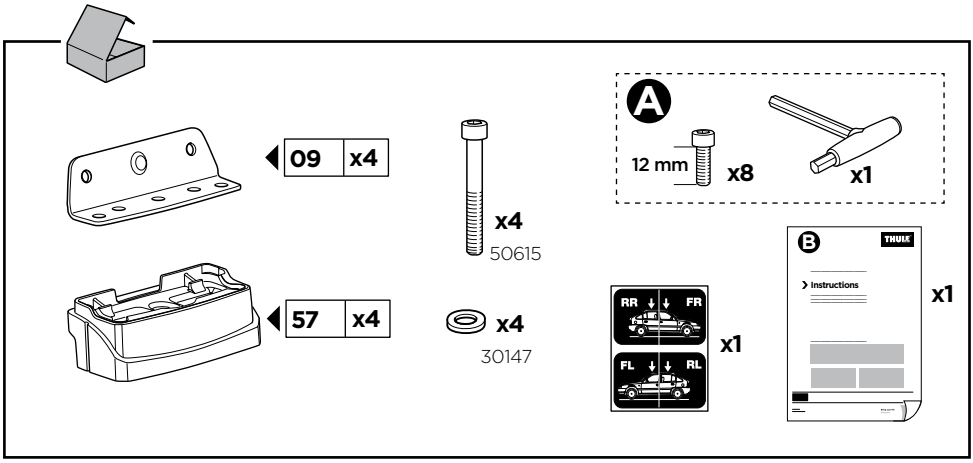
09 x4
57 x4
x4
50615
x4
30147
A
12 mm
x8
x1
RR
FR
FL
RL
x1
B
THULE
Instructions
x1

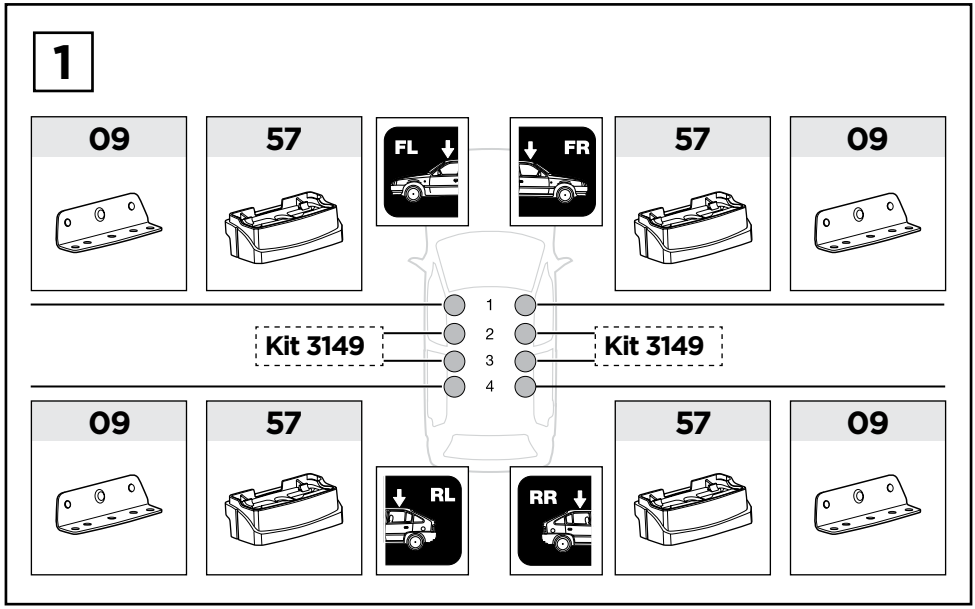
1
09
57
FL
FR
57
09
1
2
3
4
Kit 3149
Kit 3149
09
57
RL
RR
57
09

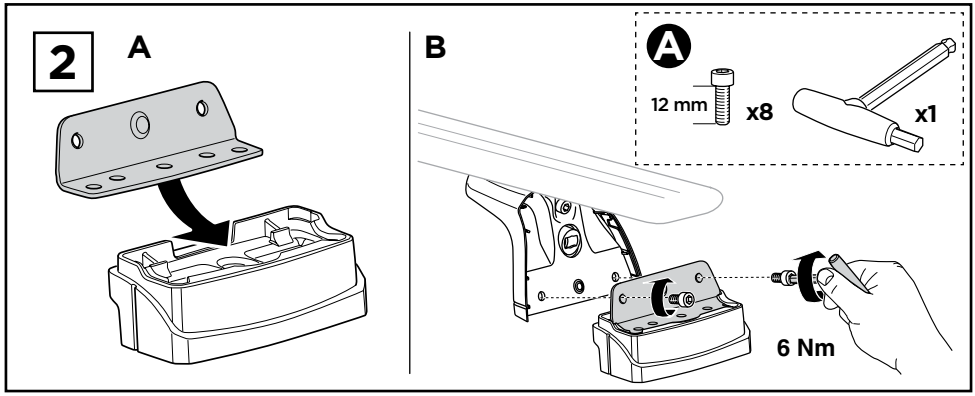
2
A
B
A
12 mm
x8
x1
6 Nm

3

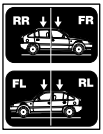

x1

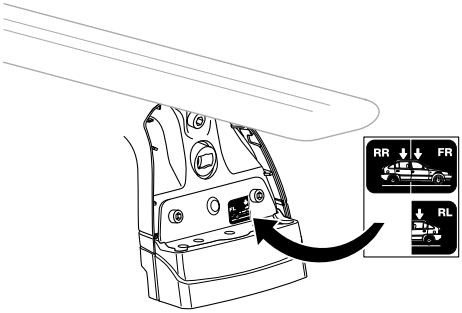

4

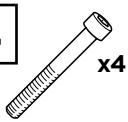

x4

x4

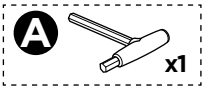

x1

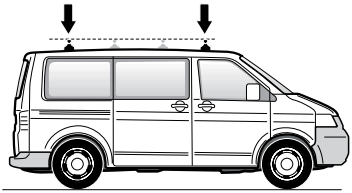

A

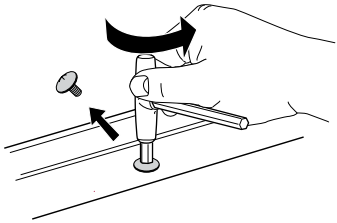

B

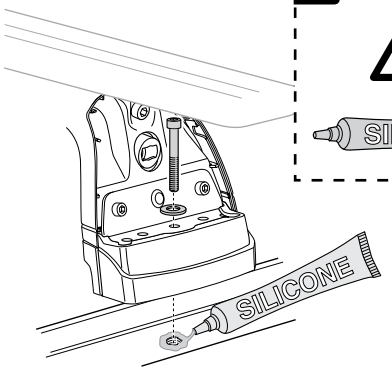

C

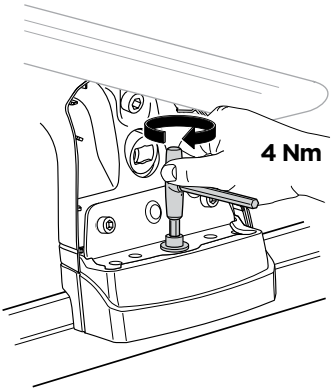

D

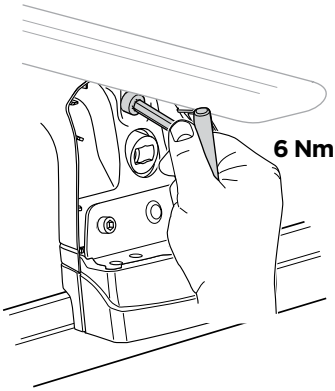

i

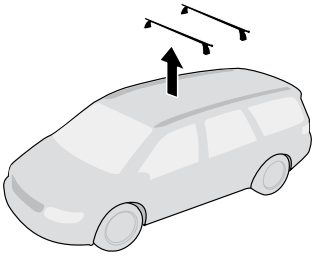

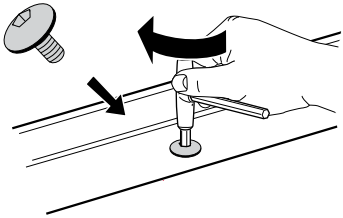

WW
NA
Thule Sweden AB, Box 69, 330 33 Hillerstorp, SWEDEN
Thule Inc., 42 Silvermine Road, Seymour, Connecticut 06483, USA
info@thule.com
Phone: 800-238-2388
www.thule.com